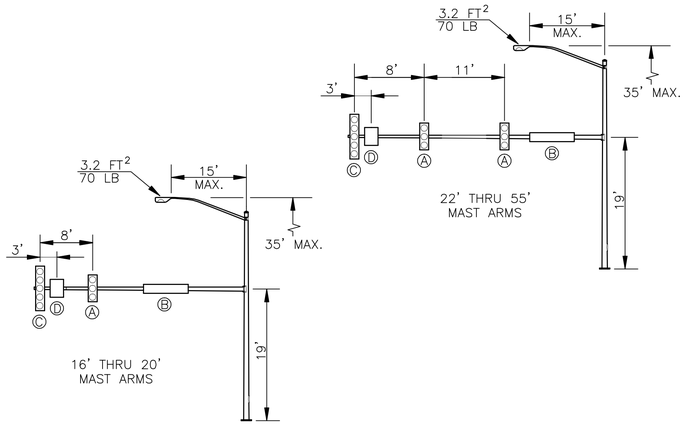

DEVICE	DESCRIPTION	PROJ. AREA (FT 2)	WEIGHT (LBS)
Ⓐ	12"–3 SEC. SIGNAL WITH BACKPLATES	8.67	30
Ⓑ	18" x 84" STREET NAME SIGN	8.50	25
Ⓒ	12"–5 SEC. SIGNAL WITH BACKPLATES	13.33	50
Ⓓ	30" x 36" MAST ARM MOUNTED SIGN	7.50	22

LOADING INFORMATION

S,Y,Z AS PER MANUFACTURER

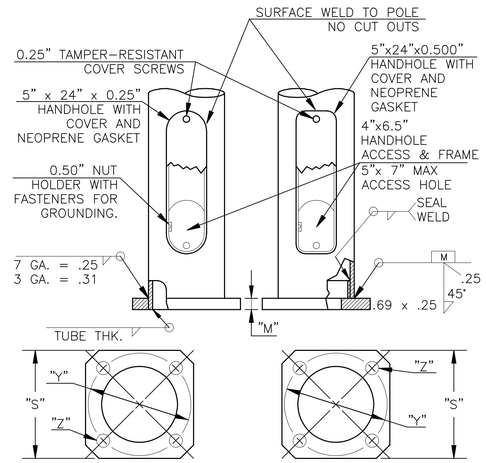

FOR 10" TO 13" POLE BASES

DETAIL 2
POLE BASE

FOR 14" & 15" POLE BASES

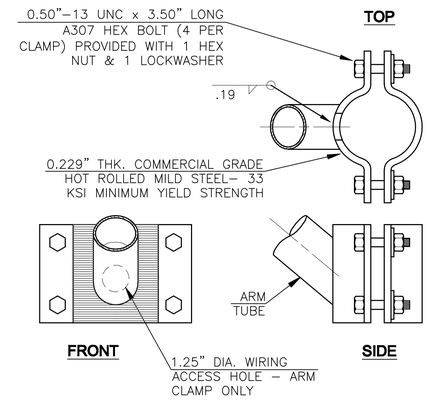

DETAIL 5
LUMINAIRE ARM ATTACHMENT

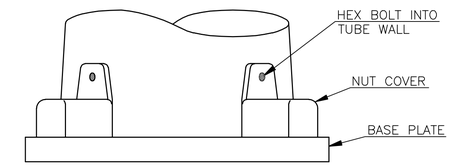

DETAIL 3
NUT COVER: 10" THRU 12"&15" BASES

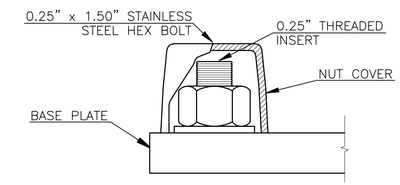

DETAIL 4
NUT COVER: 13" THRU 14" BASES

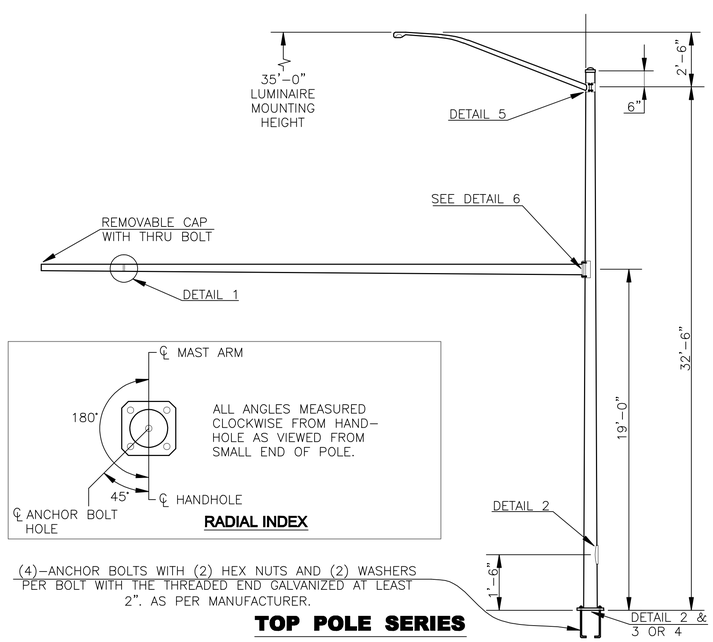

TOP POLE SERIES

A,B,C AS PER MANUFACTURER

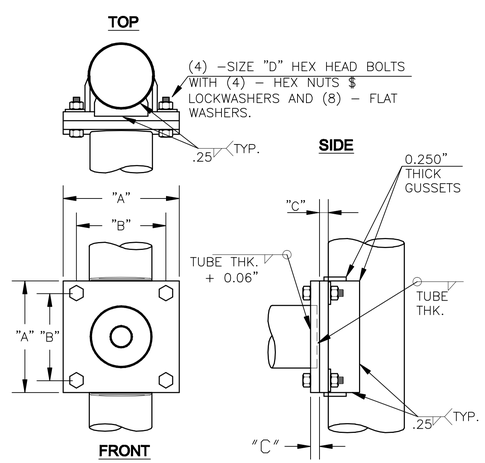

DETAIL 6
SIGNAL ARM ATTACHMENT

NOTE: Alternate flange plate design (as per KDOT specs) shall be used.

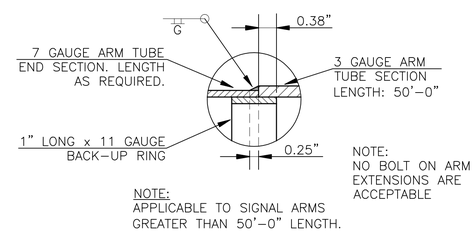

DETAIL 1
SIGNAL ARM SPLICE

GENERAL NOTES :

1. TRAFFIC SIGNAL POLES SHALL MEET AASHTO 2001 AND ALL INTERIMS.
2. BASIC WIND SPEED - SECTION 3.8.2 AND FIGURE 3-2, 90mph.
3. DESIGN LIFE OR RECURRENCE INTERVAL - SECTION 3.8.3 AND TABLE 3-3, 50 YEARS.
4. FATIGUE CATEGORY - SECTION 11.6 AND TABLE 11-1, CATEGORY II (TWO).
5. GALLOPING LOADS - SECTION 11.7.1, DO NOT CANTILEVER SUPPORT STRUCTURES TO RESIST PERIODIC GALLOPING FORCES.
6. TRUCK LOADS - SECTION 11.7.4, DO NOT INCLUDE TRUCK-INDUCED GUST LOADS AS ALLOWED BY THE OWNER.

NO.	DATE:	REVISION	BY:	APP'D
4	11–21–11	UPDATE MAST ARM LOADING SPEC.	KAP	LGV
3	03–25–11	CHANGE SIZE OF SIGN	KAP	LGV
2	11–01–09	USE 2001 AASHTO	KAP	LGV
1	01–15–04	UPDATE STANDARDS	KAP	LGV

DRAWN BY: K.PELTON

APP'D BY: Linda Welborn

TOPEKA Public Works
ENGINEERING
620 SE MADISON STREET - 2nd FLR. • TOPEKA, KS 66607
Phone: (785) 368-3842 • Fax: (785) 368-3851

STANDARD DETAILS

MAST ARM POLE DETAILS

DATE:

PAGE: OF

DRAWING: DT–103

PROJ.