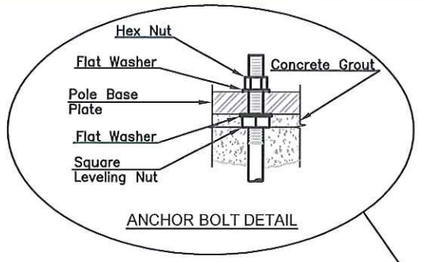

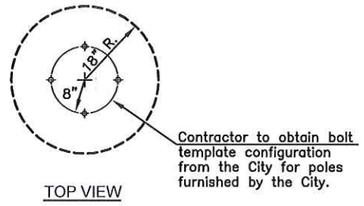

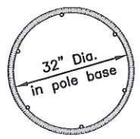

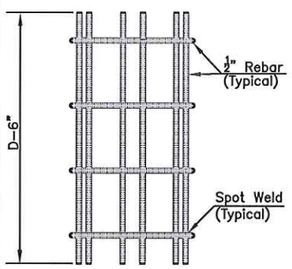

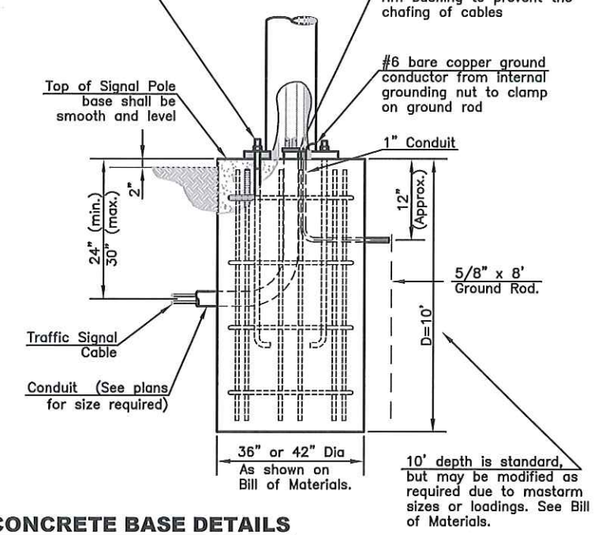

CONCRETE BASE DETAILS

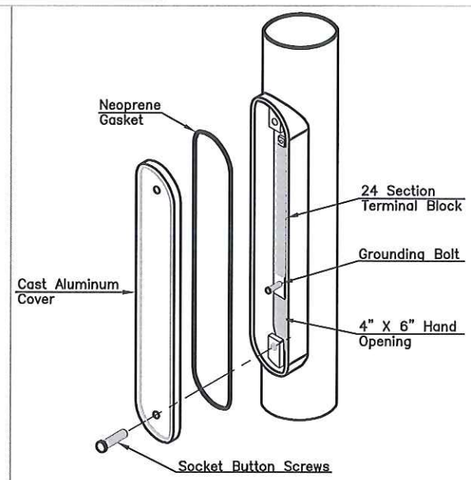

ITC HANDHOLE - TYPE "A"

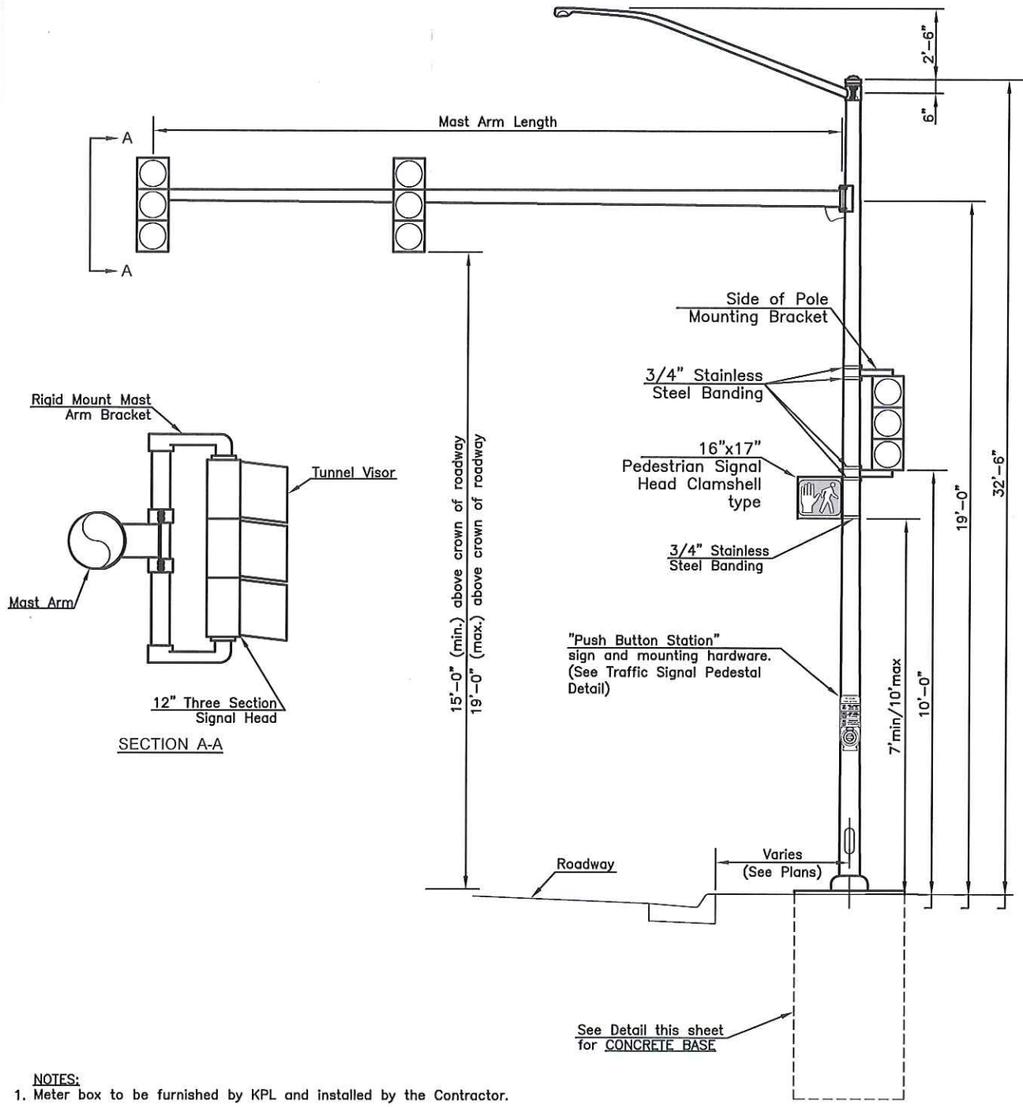

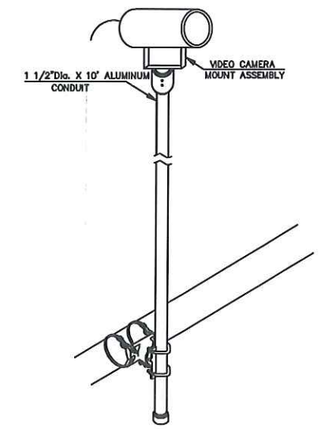

RIGID SIGNAL MAST ARM MOUNTING DETAIL

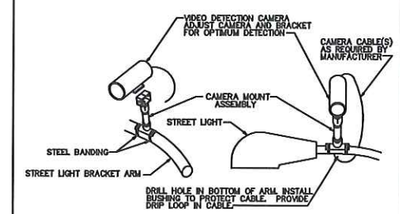

VIDEO CAMERA MOUNTING TO STREET LIGHT BRACKET ARM

NOTE:
If a ground mounted controller is used, an additional conduit will be needed in pole base for power feed.

NOTE:
At the location where the power connection is made, two (2) ground rods, a minimum of six (6) feet apart will be required. Ground rods to be 5/8" x 8'.

NOTES:
1. Meter box to be furnished by KPL and installed by the Contractor.
2. A minimum of 12" of power lead-in shall be left outside the weather head for hook-up.
3. Traffic Signal Heads on Mast Arm to be mounted with Rigid Mount Mast Arm Bracket.
4. Directional alignment of Pedestrian Signal Head and bracket to be determined in the field by the Engineer or their representative.
5. Through holes in pole shall be drilled and well reamed to prevent the chafing of cables.
6. Through holes in the arm shall be drilled, well reamed, and fitted with a wiring grommet to prevent the chafing of cables.

STEEL TRAFFIC SIGNAL POLE WITH MAST ARM

NO.	DATE:	REVISION	BY:	APP'D
4	05-04-16	UPDATE CONCRETE POLE BASE DETAIL	KAP	TC
3	05-11-10	ADD VIDEO MAST ARM MOUNTING DETAILS	KAP	LGV
2	07-08-04	ADD VIDEO MOUNTING DETAILS	KAP	LGV
1	01-15-04	UPDATE STANDARDS	KAP	

DRAWN BY: K.PELTON
APP'D BY: T.CODER P.E.

TOPEKA Public Works
ENGINEERING
620 SE MADISON STREET - 2nd FLR. • TOPEKA, KS 66607
Phone: (785) 368-3842 • Fax: (785) 368-3881

STANDARD DETAILS

MAST ARM, BASE, AND POWER FEED DETAILS

DATE:
PAGE: OF
DRAWING: DT-104
PROJ.