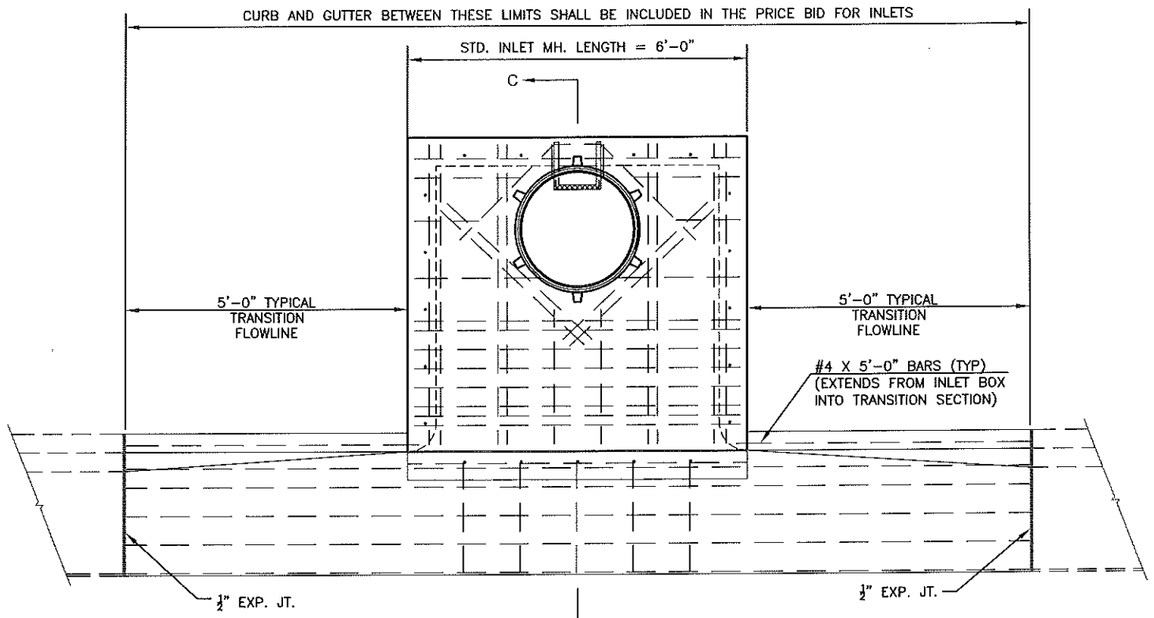

PLAN

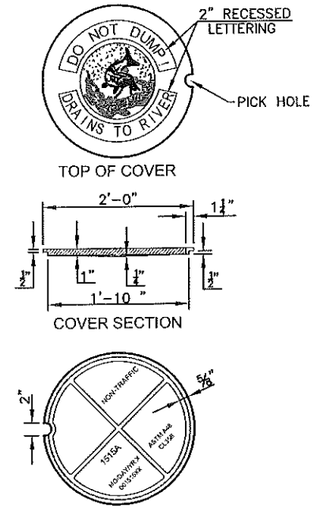

MANHOLE COVER

WT. 69 lbs.

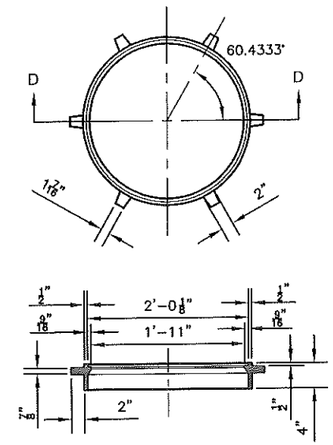

SECTION D-D

FRAME CASTING

WT. 64 lbs.

CLAY AND BAILEY NO. 3215 OR APPROVED EQUAL.

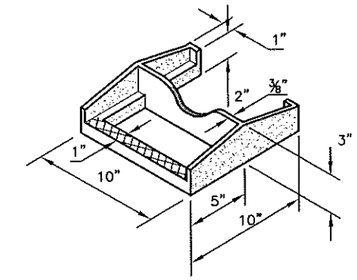

MH STEP CASTING

WT. 11 lbs.

CLOW–NATIONAL NO. F–3650 CLAY AND BAILEY NO. 2113 NEENAH R–1980–E OR EQUAL

COPOLYMER POLYPROPYLENE PLASTIC STEP, PS1–PF or PS2–PF, MANUFACTURED BY M.A. IND. INC. OR APPROVED EQUAL MAY BE USED AS AN ALTERNATE TO DETAILED CASTING. THIS STEP MAY BE CAST IN PLACE OR INSTALLED IN ACCORDANCE WITH THE MANUFACTURERS RECOMMENDED INSTALLATION PROCEDURE.

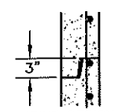

JOINT DESIGN IF MORE THAN ONE SECTION.

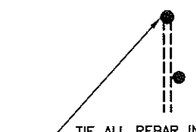

TIE ALL REBAR INTERSECTIONS IN RISER WALLS EXCEPT: #3 BAR GRADE 40 WELDED TO TOP OF VERTICAL BARS

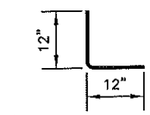

CORNER BARS #4 BARS 24" LONG TIE @ 12" CENTERS ALL CORNERS

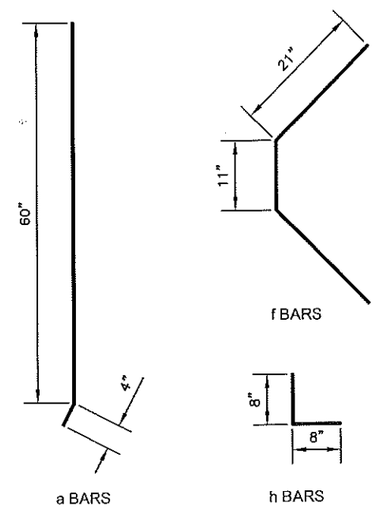

NOTES:
1. STEPS SHALL BE INSTALLED IN ALL INLETS OVER 4' DEEP AND LOCATED UNDER MANHOLE RING AND COVER.
2. SUPPLIERS SHALL GRIND ALL BURRS SMOOTH ON CASTINGS.
3. THE INLET TOP SHALL SIT SQUARELY ON TOP OF THE INLET BOTTOM SECTION. THE INLET WALLS SHALL NOT BE OFFSET MORE THAN ONE INCH BETWEEN TOP AND BOTTOM SECTIONS.

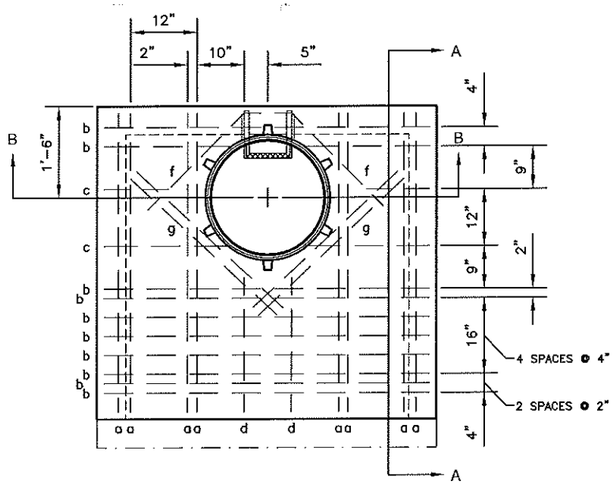

LONGITUDINAL BAR SIZE

L = 4' – 5' #4 BAR
L = 6' – 7' #5 BAR
L = 8' – 10' #6 BAR
ALL TRANSVERSE BARS ARE #4'S

#4, #5, #6 BARS, ASTM A–615, GRADE 60

CONCRETE: 4000 PSI. AIR ENTRAINED

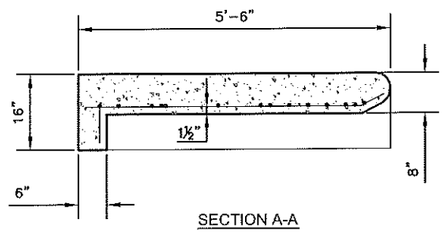

SECTION A-A

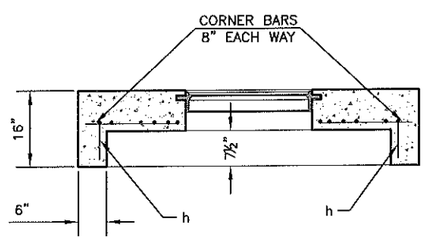

SECTION B-B

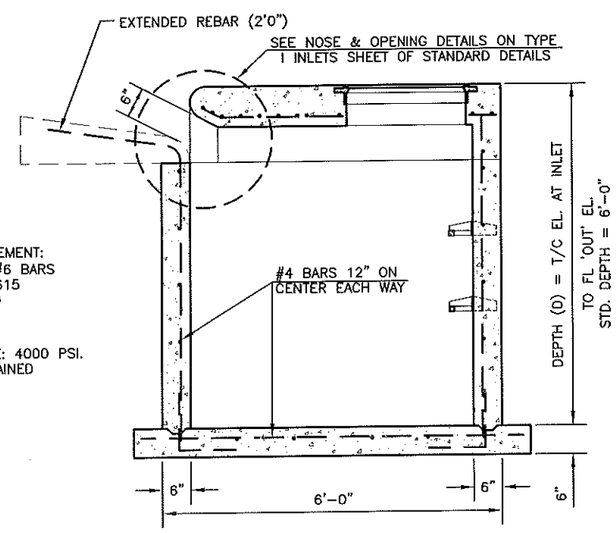

REINFORCEMENT:
#4, #5, #6 BARS
ASTM A–615
GRADE 60

CONCRETE: 4000 PSI.
AIR ENTRAINED

SECTION C-C

NO.	DATE:	REVISION	BY:	APP'D
3	March 2013	Changed inlet top thickness to 8"	DHS	SB
2	Dec. 2009	Added #4 bar to PLAN & 3. to NOTES	DHS	SB
1	Feb. 2008	Mod. MH Cover	DHS	SB

DRAWN BY: rm/mc
APP'D BY: R. Timothy King

SHAWNEE COUNTY, KANSAS
PUBLIC WORKS DEPARTMENT
1515 NW SALINE
TOPEKA, KS 66618
(785) 233-7702

TOPEKA Public Works
ENGINEERING
620 SE MADISON St. • 2nd Floor • TOPEKA, KS 66607
Phone: (785) 368-3642 • Fax: (785) 368-3881

STANDARD DETAILS

TYPE I-P INLETS
(PRECAST)
(DT-010)

DATE: Month Year
SHEET: X of X
PROJ.: X–XXXXXX.XX