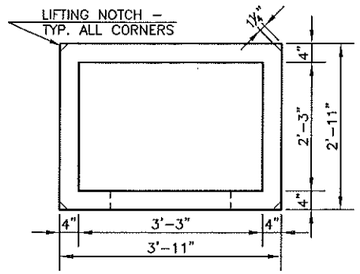

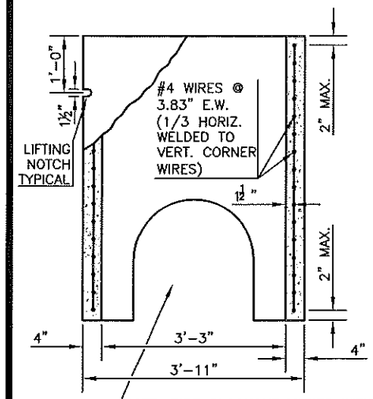

NOTE: PIPE BLOCKOUT VARIES WITH PIPE SIZE, MATERIAL AND ALIGNMENT AND SHALL ALLOW 3" CLEAR FROM PIPE TO WALL

PRECAST INLET BOX RISER

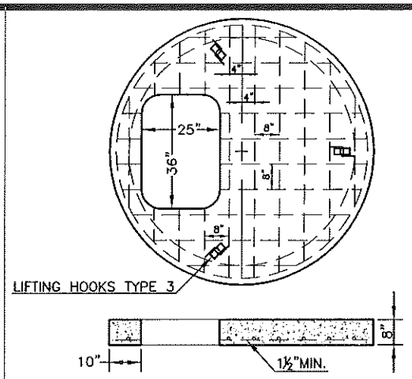

6' ID IIP CURB INLET FLATTOP

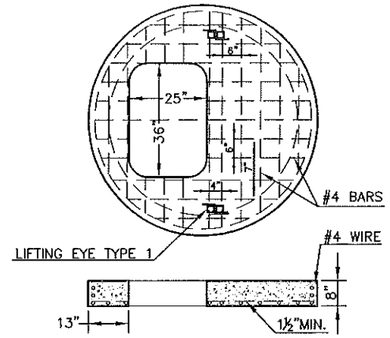

5' ID IIP CURB INLET FLATTOP

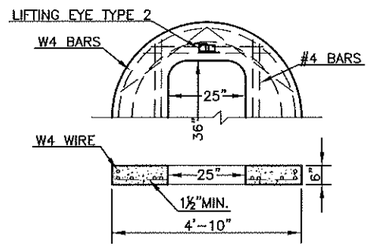

4' ID IIP CURB INLET FLATTOP

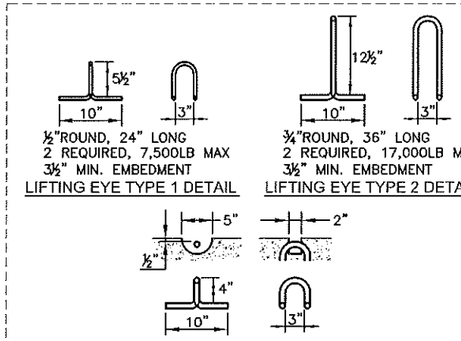

PRECAST INLET MANHOLE TOP NOTES

1. ALL REINFORCING SHALL BE #4 BARS EXCEPT AS NOTED
2. ALL CLEARANCE SHALL BE 1-1/2" EXCEPT AS NOTED

PRECAST INLET MANHOLE RISER NOTES

1. ALL MANHOLE RISER SECTIONS SHALL CONFORM TO A.S.T.M. 478-80.
2. ALL MANHOLE CONSTRUCTION SHALL BE WATERTIGHT.
3. STEPS SHALL BE PS1-PF OR PS2-PF AS MANUFACTURED BY M.A. INDUSTRIES INC. OF APPROVED EQUAL AND SHALL BE PLACED TO PROVIDE EASY ACCESS TO MANHOLE AT 16" O.C. MAX. WHILE MAINTAINING VERT. ALIGNMENT.

PRECAST INLET MANHOLE RISER & TOP

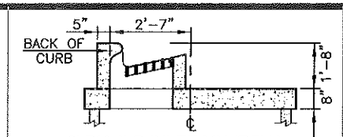

6' DIA II-P INLET MH (REV.)

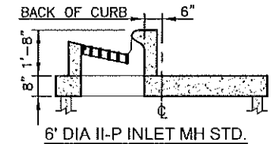

6' DIA II-P INLET MH STD.

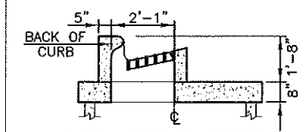

5' DIA II-P INLET MH (REV.)

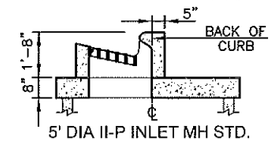

5' DIA II-P INLET MH STD.

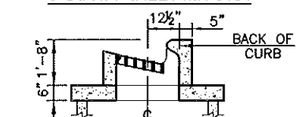

4' DIA II-P INLET MH STD. (& REV.)

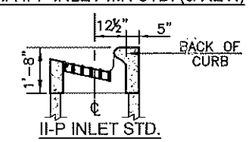

II-P INLET STD.

INLET POSITIONS WITH BACK OF CURB

CURB AND GUTTER BETWEEN THESE LIMITS TO BE INCLUDED IN THE PRICE BID FOR INLET

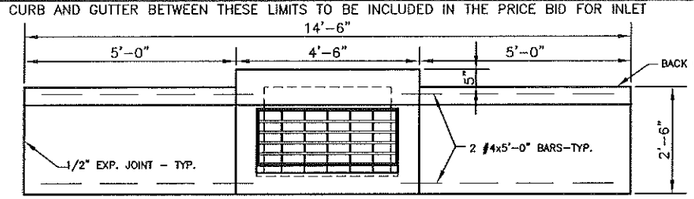

PLAN

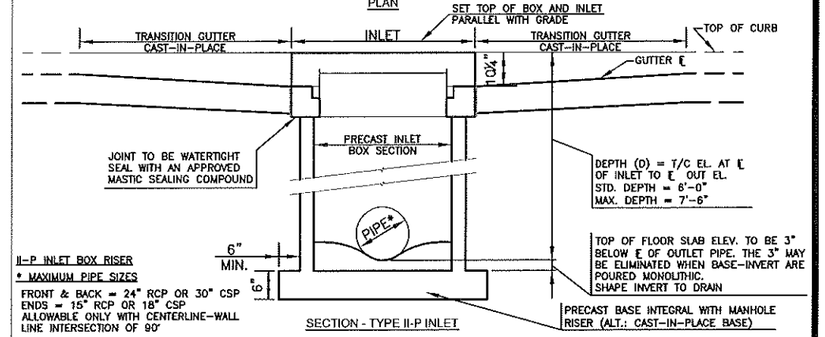

SECTION - TYPE II-P INLET

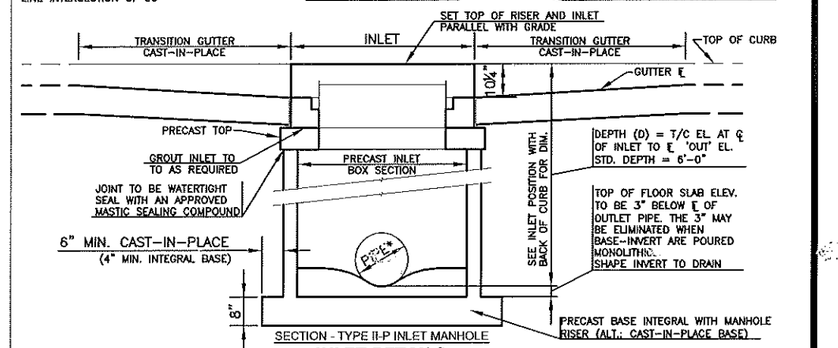

SECTION - TYPE II-P INLET MANHOLE

INLET DETAILS

NOTE:
THE BOTTOM SECTION OF ALL CAST-IN-PLACE MANHOLES AND PRECAST MANHOLES NOT BUILT MONOLITHICALLY WITH THE BASE SHALL BE SET INTO A STEEL REINFORCED (#4 @ 12" E.W.) CONCRETE BASE (4,000 PSI) A MINIMUM OF 4 INCHES. IN THIS CASE, THE BASE THICKNESS SHALL BE INCREASED BY 4 INCHES.

148 LB. PEDESTRIAN GRATE	
A	2 EA. ∠ ¼x3x3x3'-1½"
B	4 EA. PL ¼X3x0'-3"
C	25 EA. PL ¼x2x2'-1⅛"
D	2 EA. ∠ ¼x3x3x2'-1½"
E	52 EA. PL 3/16x1½x0'-1⅛"
F	1-7/16" O.C.

250 LB. TRAFFIC GRATE	
A	2 EA. ∠ ¼x3x3x3'-1⅛"
B	4 EA. PL ¼X3x0'-3"
C	12 EA. PL ¼x3x2'-⅞"
D	2 EA. ∠ ¼x3x3x2'-1"
E	26 EA. PL ⅜øx0'-2⅜"
F	2⅞" O.C.

130 LB. YARD GRATE	
A	2 EA. ∠ ¼x3x3x3'-1½"
B	4 EA. PL ¼X3x0'-3"
C	12 EA. PL ¼x3x2'-1⅛"
D	2 EA. ∠ ¼x3x3x2'-1½"
E	26 EA. PL ⅜øx0'-2⅜"
F	2⅞" O.C.

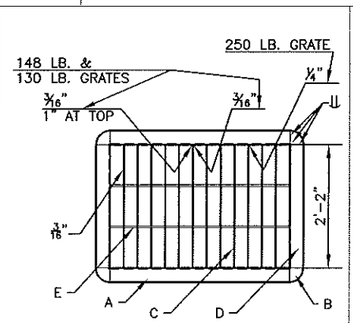

PLAN

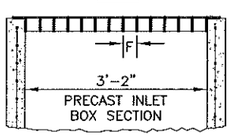

SECTION

AREA INLET GRATE

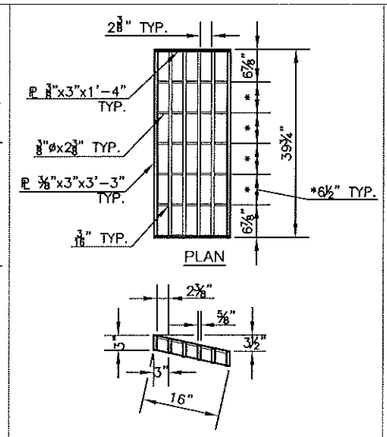

PLAN

SECTION

INLET GRATE

WEIGHT: 140 LBS

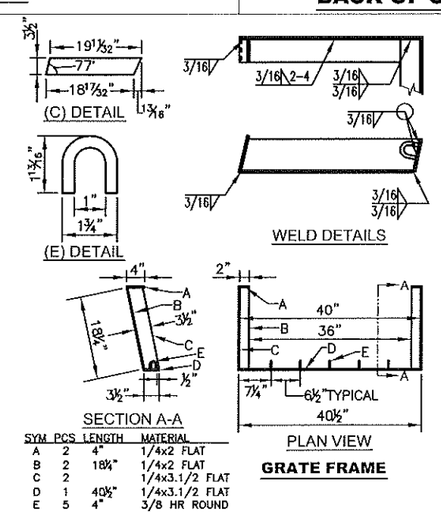

SYM	PCS	LENGTH	MATERIAL
A	2	4"	1/4x2 FLAT
B	2	18¾"	1/4x2 FLAT
C	2		1/4x3.1/2 FLAT
D	1	40½"	1/4x3.1/2 FLAT
E	5	4"	3/8 HR ROUND

GRATE FRAME

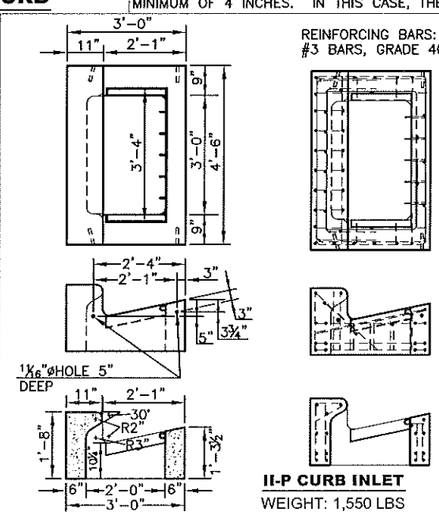

II-P CURB INLET

WEIGHT: 1,550 LBS

NOTES:

1. CAST IN PLACE CONC. SHALL BE 4000PSI.
2. PRECAST CONC. SHALL BE 4000 PSI.
3. REINFORCING WIRE SHALL CONFORM TO ASTM A82.
4. REINFORCING BARS SHALL CONFORM TO ASTM A615.
5. GROUT ALL PIPES IN PLACE.
6. GRATES & FRAMES SHALL BE ASTM A36 STEEL COATED WITH BITUMASTIC BLACK SOLUTION (COAL TAR BASE) AS MANUFACTURED BY KOPPERS OR APPROVED EQUAL.
7. THE INLET TOP SHALL SIT SQUARELY ON TOP OF THE INLET BOTTOM SECTION. THE INLET WALLS SHALL NOT BE OFFSET MORE THAN ONE INCH BETWEEN TOP AND BOTTOM SECTIONS.

NO.	DATE:	REVISION	BY:	APP'D
2	Dec. 2009	Mod. dim at Inl. Pos. & added 7.to NOTES	DHS	SB
1	Feb. 2008	Update	DHS	SB

DRAWN BY: rm/mc

APP'D BY: [signature]

SHAWNEE COUNTY, KANSAS
PUBLIC WORKS DEPARTMENT
1515 NW SALINE
TOPEKA, KS 66618
(785) 233-7702

TOPEKA Public Works
ENGINEERING
620 SE MADISON St. • 2nd Floor • TOPEKA, KS 66607
Phone: (785) 368-3842 • Fax: (785) 368-3881

STANDARD DETAILS

TYPE II-P INLET
(PRECAST)
(DT-011)

DATE: Month Year
SHEET: X of X
PROJ.: X-XXXXXX.XX