NOTE: REINF. STEEL BARS IN DITCH INLET SHALL BE INCLUDED IN THE PRICE BID FOR EACH STRUCTURE.

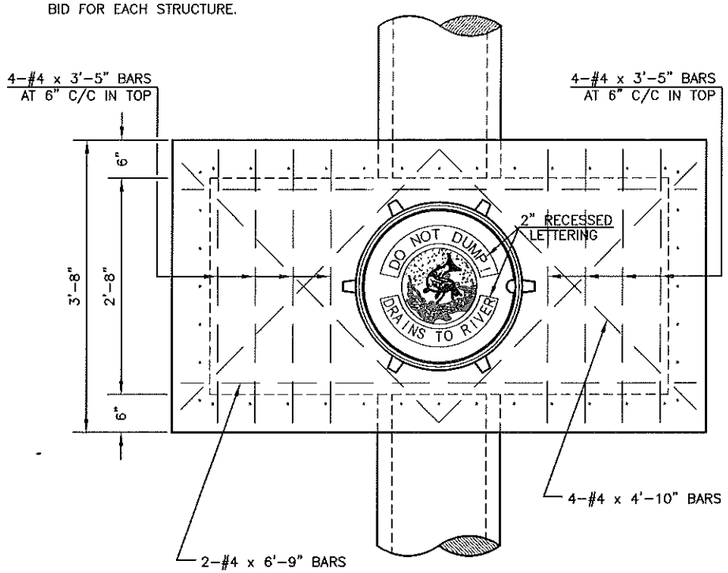

PLAN

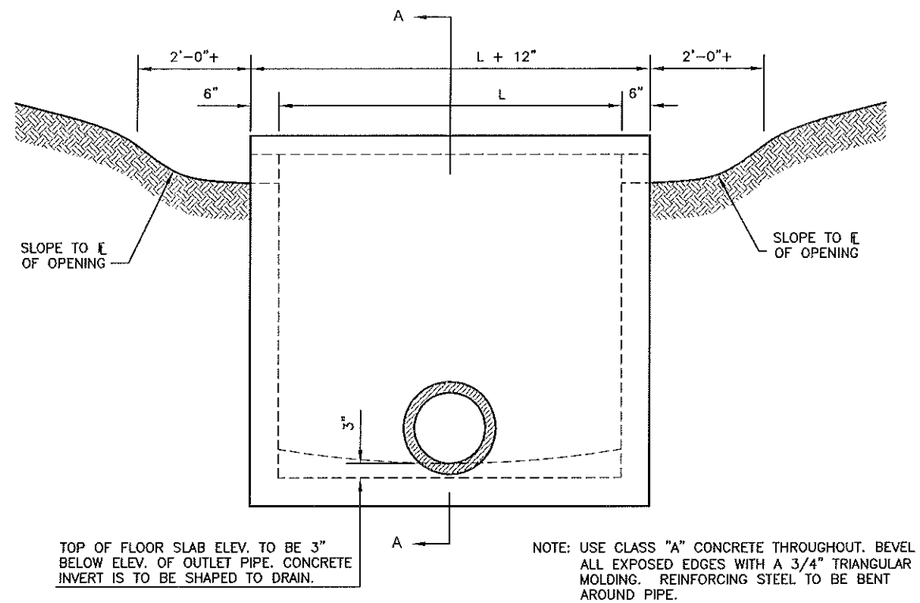

TOP OF FLOOR SLAB ELEV. TO BE 3" BELOW ELEV. OF OUTLET PIPE. CONCRETE INVERT IS TO BE SHAPED TO DRAIN.

NOTE: USE CLASS "A" CONCRETE THROUGHOUT. BEVEL ALL EXPOSED EDGES WITH A 3/4" TRIANGULAR MOLDING. REINFORCING STEEL TO BE BENT AROUND PIPE.

ELEVATION

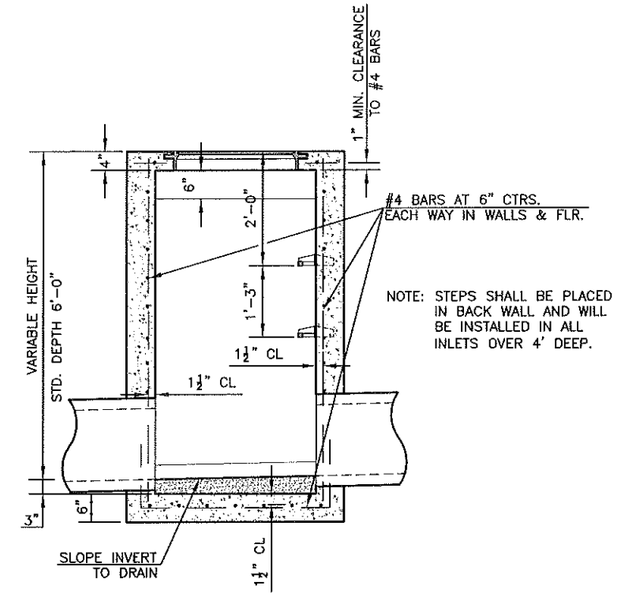

SECTION A-A

DITCH INLET-TYPE I

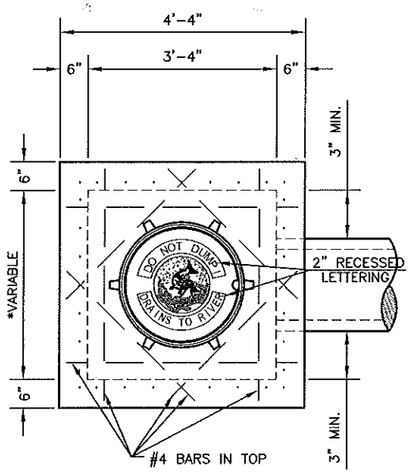

PLAN

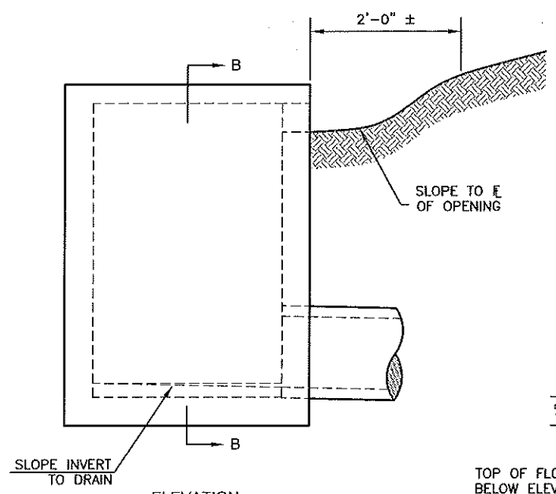

ELEVATION

DITCH INLET-TYPE IV

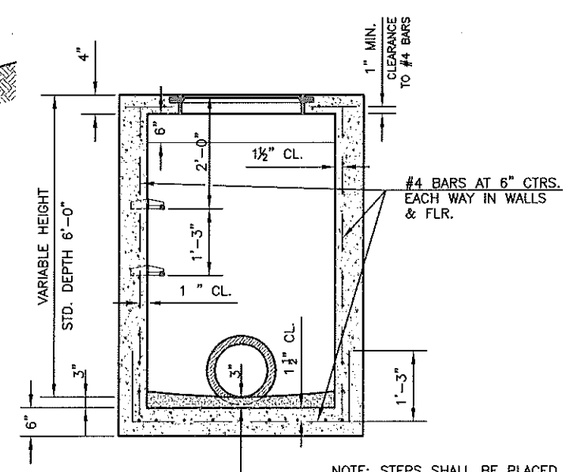

TOP OF FLOOR SLAB ELEV. TO BE 3" BELOW ELEV. OF OUTLET PIPE. CONCRETE INVERT IS TO BE SHAPED TO DRAIN.

NOTE: STEPS SHALL BE PLACED IN BACK WALL AND WILL BE INSTALLED IN ALL INLETS OVER 4' DEEP.

SECTION B-B

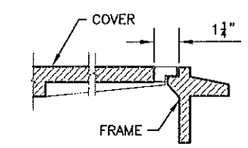

SECTION THRU PICK HOLE

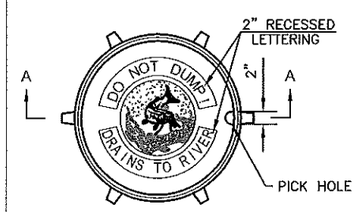

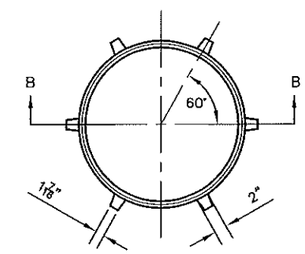

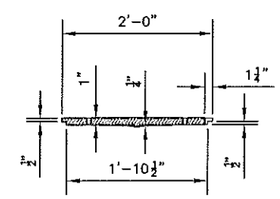

SECTION A-A

COVER CASTING

WT. 85 lbs.

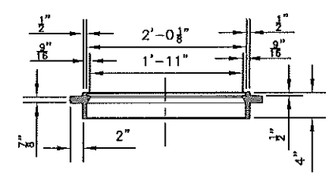

SECTION B-B

FRAME CASTING

WT. 60 lbs.

FRAME & COVER

COMBINED WEIGHT 145 LBS.

NOTE: USE CLASS "A" CONCRETE THROUGHOUT. BEVEL ALL EXPOSED EDGES WITH A 3/4" TRIANGULAR MOLDING. REINFORCING STEEL TO BE BENT AROUND PIPE.

REINFORCING STEEL BARS IN DITCH INLET SHALL BE INCLUDED IN THE PRICE BID FOR EACH STRUCTURE.

6" MAX. CLEAR SPACING BETWEEN #4 BARS AND FACE OF WALL.

* PLACE ADDITIONAL BARS WHEN REQ'D.

NO.	DATE:	REVISION	BY:	APP'D
1	Feb. 2008	Mod. MH Covers	DHS	SB

DRAWN BY: rm/mc

APP'D BY: [signature]

SHAWNEE COUNTY, KANSAS
PUBLIC WORKS DEPARTMENT
1515 NW SALINE
TOPEKA, KS 66618
(785) 233-7702

TOPEKA Public Works
ENGINEERING
620 SE MADISON St. • 2nd Floor • TOPEKA, KS 66607
Phone: (785) 368-3842 • Fax: (785) 368-3881

STANDARD DETAILS

DITCH INLET
(DT-012)

DATE: Month Year
SHEET: X of X
PROJ.: X-XXXXXX.XX