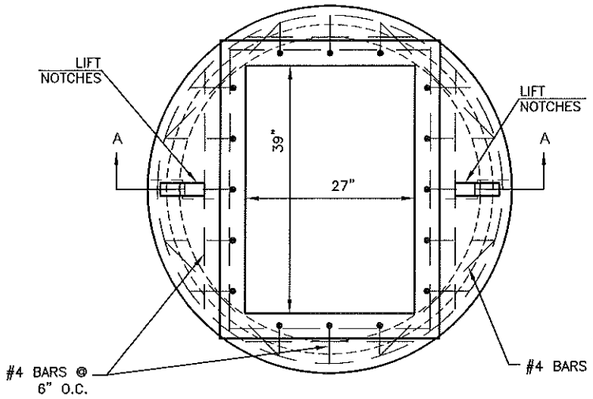

PLAN VIEW

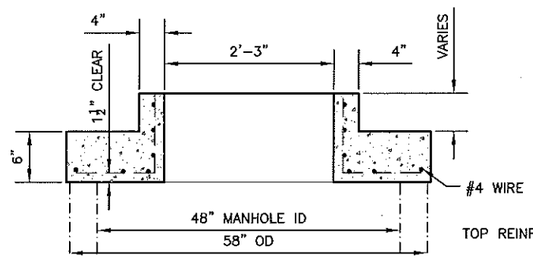

SECTION A-A

4' DIA. PRECAST TOP

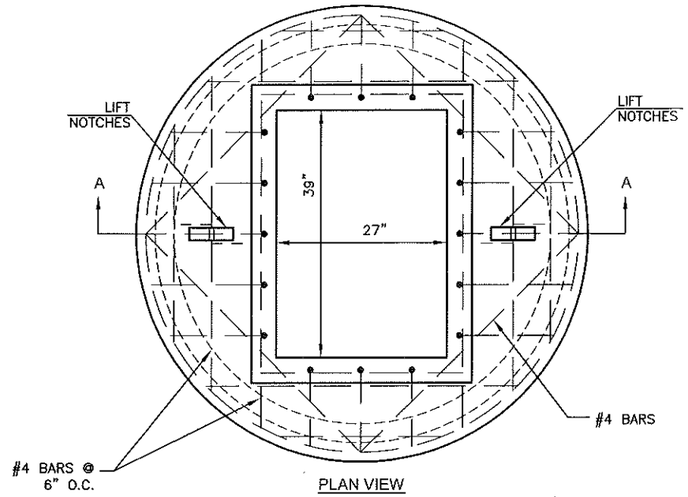

PLAN VIEW

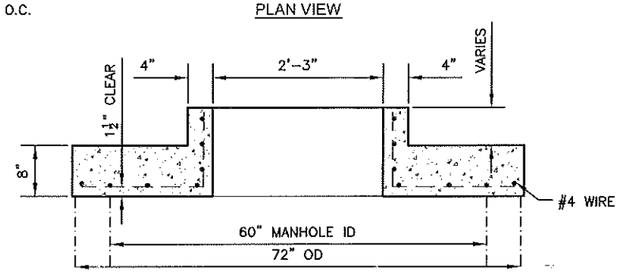

SECTION A-A

TOP REINFORCEMENT :#4 WIRE, ASTM A 82
:WELDED WIRE, ASTM A 185
:#4 AND #5 BARS, ASTM A 615
TOP CONCRETE :4000 PSI (AE)

5' DIA. PRECAST TOP

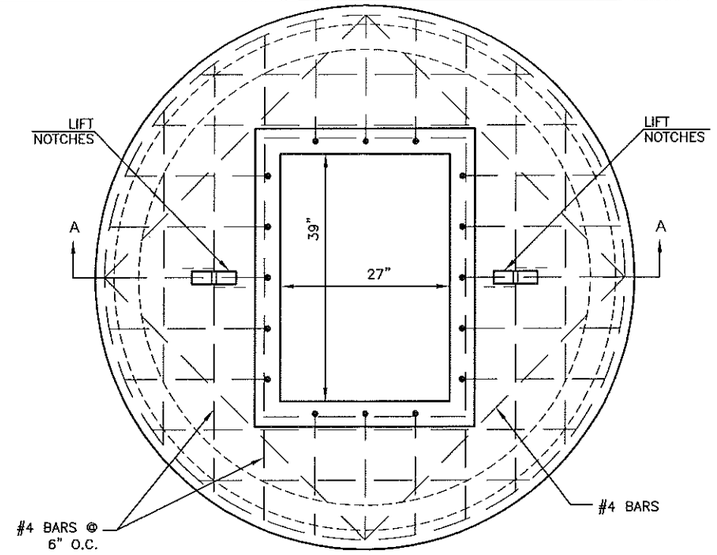

PLAN VIEW

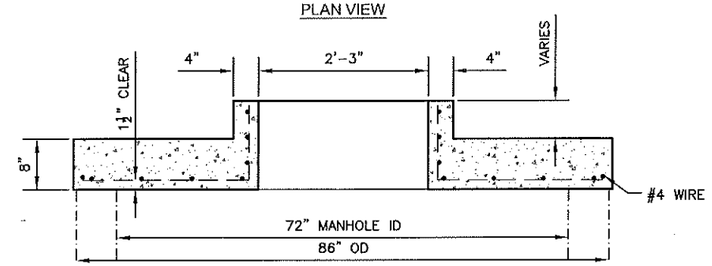

SECTION A-A

6' DIA. PRECAST TOP

PRECAST TYPE II-P AREA INLET MANHOLE TOP

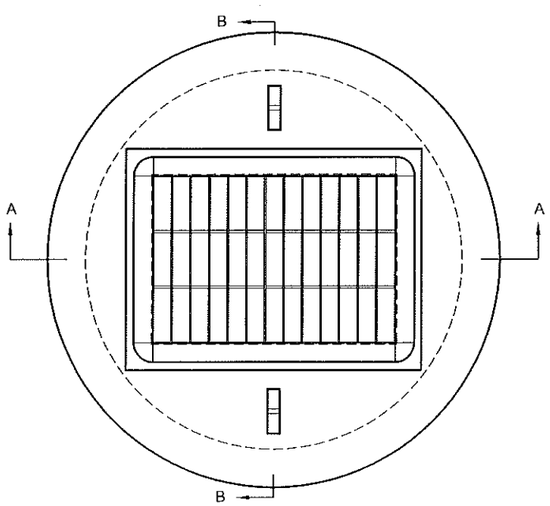

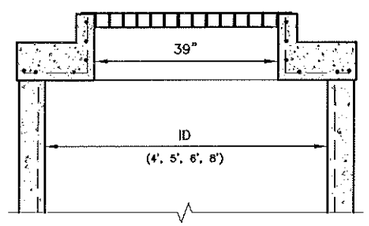

SECTION A-A

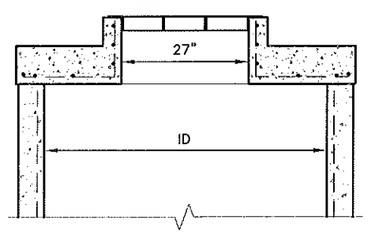

SECTION B-B

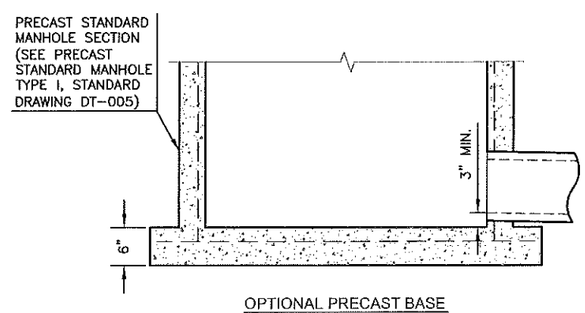

OPTIONAL PRECAST BASE

PRECAST TYPE II-P AREA INLET MANHOLE

148 LB. PEDESTRIAN GRATE	
A	2 EA. ∠ ¼"x3"x3"x3'-1½"
B	4 EA. PL ¼"X3"x0'-3"
C	25 EA. PL ¼"x3"x2'-1⅛"
D	2 EA. ∠ ¼"x3"x3"x2'-1¼"
E	52 EA. PL 3/16"x1½"x0'-1⅛"
F	1 7/16" O.C.

250 LB. TRAFFIC GRATE	
A	2 EA. ∠ ¼"x3"x3"x3'-1⅛"
B	4 EA. PL ¼"X3"x0'-3"
C	12 EA. PL ¼"x3"x2'-⅞"
D	2 EA. ∠ ¼"x3"x3"x2'-1"
E	26 EA. PL ⅜"øx0'-2⅜"
F	2⅞" O.C.

130 LB. YARD GRATE	
A	2 EA. ∠ ¼"x3"x3"x3'-1½"
B	4 EA. PL ¼"X3"x0'-3"
C	12 EA. PL ¼"x3"x2'-1⅜"
D	2 EA. ∠ ¼"x3"x3"x2'-1½"
E	26 EA. PL ⅜"øx0'-2⅜"
F	2⅞" O.C.

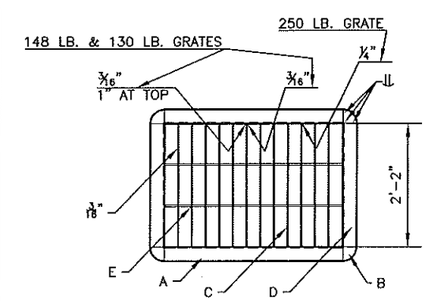

PLAN

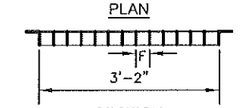

SECTION

AREA INLET GRATE

NO.	DATE:	REVISION	BY:	APP'D
1	Feb. 2008	Update	DHS	SB

DRAWN BY: rm/mc
APP'D BY: R. Timothy Kerr

SHAWNEE COUNTY, KANSAS
PUBLIC WORKS DEPARTMENT
1515 NW SALINE
TOPEKA, KS 66618
(785) 233-7702

TOPEKA Public Works ENGINEERING
620 SE MADISON St. • 2nd Floor • TOPEKA, KS 66607
Phone: (785) 368-3842 • Fax: (785) 368-3881

STANDARD DETAILS

TYPE II-P AREA INLET MANHOLE
(PRECAST)
(DT-013)

DATE: Month Year
SHEET: X of X
PROJ.: X-XXXXXX.XX