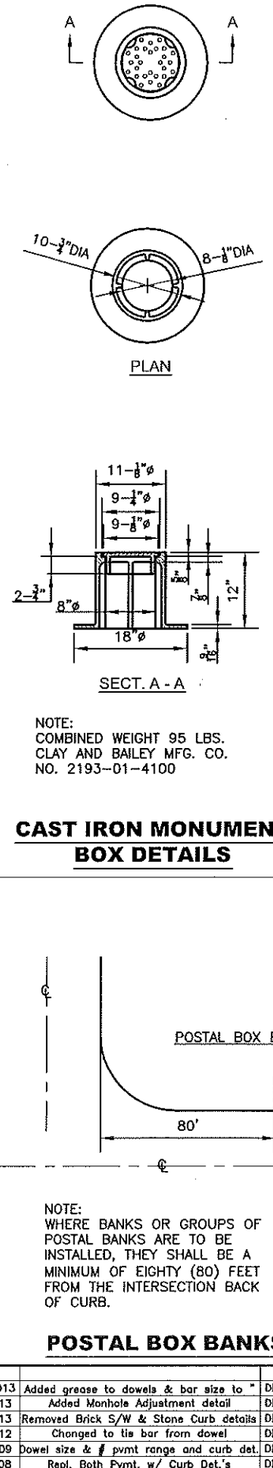

NOTE:
COMBINED WEIGHT 95 LBS.
CLAY AND BAILEY MFG. CO.
NO. 2193-01-4100

CAST IRON MONUMENT BOX DETAILS

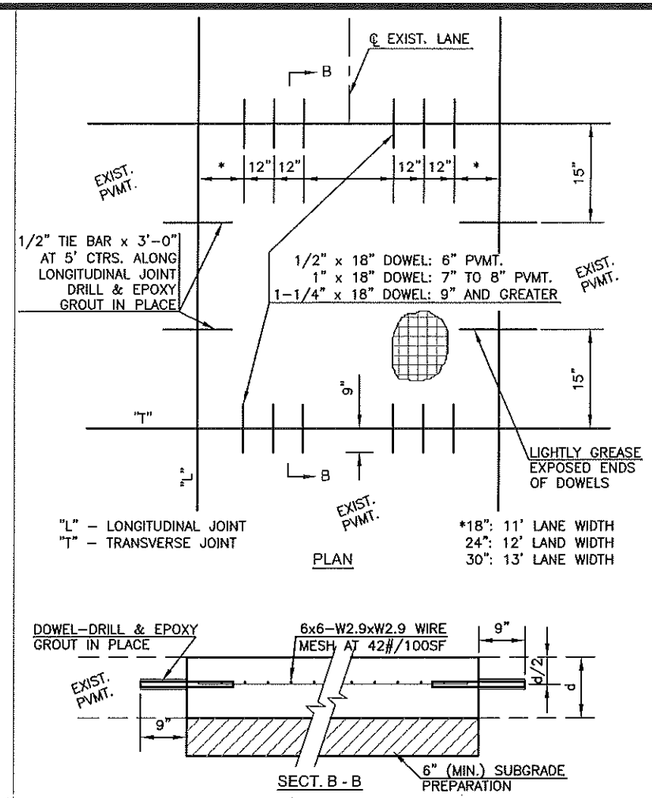

NOTES:
1. ALL MATERIAL AND METHODS SHALL BE IN ACCORDANCE WITH CITY OF TOPEKA STANDARD TECHNICAL SPECIFICATIONS, LATEST EDITION.
2. DOWEL HOLE SIZE = O.D. OF DOWEL + 1/8".
3. EPOXY GROUTING PER SEC. 830, KDOT STANDARD SPECIFICATIONS FOR STATE ROAD & BRIDGE CONSTRUCTION, LATEST EDITION.

FULL PANEL REPAIR & UTILITY CUTS FOR CONCRETE PAVEMENT

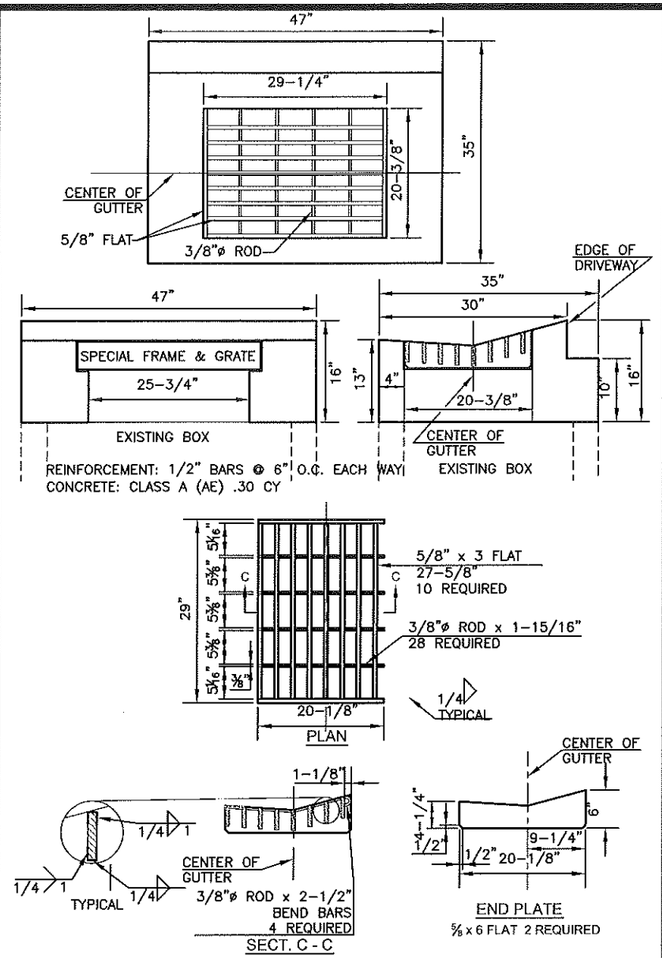

SPECIAL II-P GRATE TOP

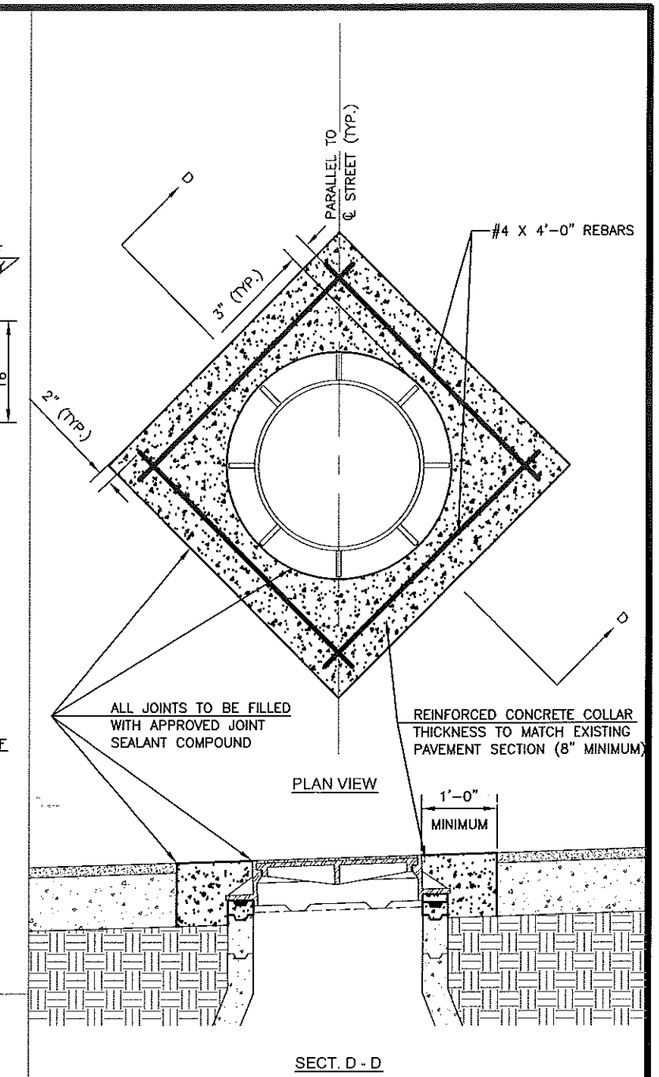

NOTES:
1. PAVEMENT SHALL BE REMOVED BY FULL DEPTH SAW CUTTING WHILE PROTECTING NEW PAVEMENT.
2. THE ORIENTATION OF THE REINFORCED CONCRETE COLLAR SHALL BE AS SHOWN OR FIELD DETERMINED BY ENGINEER.
3. ADJUST MANHOLE RING TO MATCH PAVEMENT CROSS SLOPE USING APPROVED CONCRETE MANHOLE GRADE ADJUSTMENT RINGS AND CONCRETE BLOCKS OR APPROVED HIGH-DENSITY POLYETHYLENE MANHOLE ADJUSTMENT RINGS.
4. SET MANHOLE RING WITH 2 RINGS OF 3/4" PREFORMED MASTIC SEALANT.
5. ALL TIME AND MATERIAL NECESSARY TO PERFORM THIS WORK SHALL BE CONSIDERED SUBSIDIARY TO THE BID ITEM "MANHOLE ADJUSTMENT".

MANHOLE ADJUSTMENT

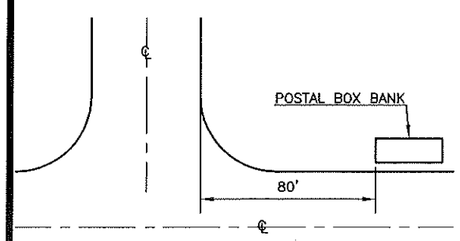

NOTE:
WHERE BANKS OR GROUPS OF POSTAL BANKS ARE TO BE INSTALLED, THEY SHALL BE A MINIMUM OF EIGHTY (80) FEET FROM THE INTERSECTION BACK OF CURB.

POSTAL BOX BANKS

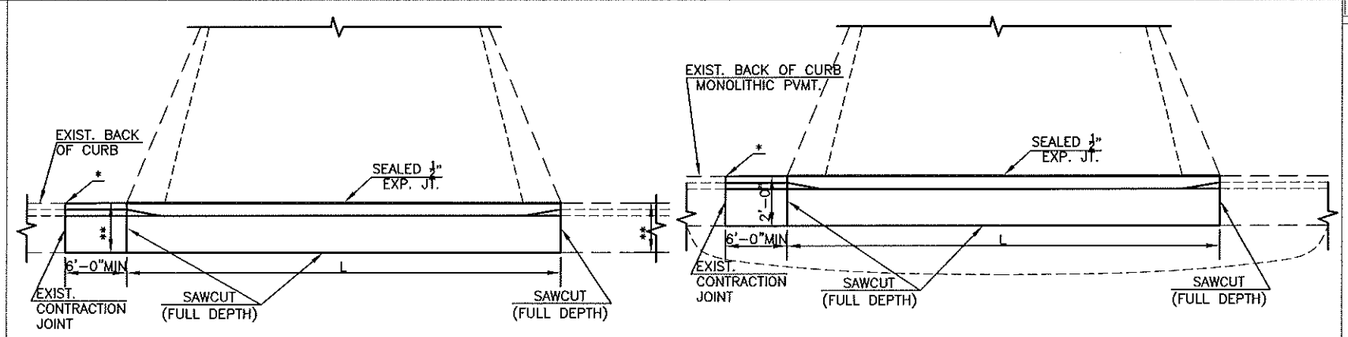

* IF CURB AND GUTTER TO BE REMOVED IS WITHIN 6'-0" OF AN EXISTING JOINT, REMOVE CURB AND GUTTER BACK TO EXISTING JOINT.
L – PER CITY STANDARD DESIGN CRITERIA.

** MATCH EXISTING CURB WIDTH.

CURB CUT/REMOVAL FOR NEW RESIDENTIAL DRIVE APPROACH

NO.	DATE:	REVISION	BY:	APP'D
6	March 2013	Added grease to dowels & bar size to "	DHS	SB
5	Jan. 2013	Added Manhole Adjustment detail	DHS	SB
4	Jan. 2013	Removed Brick S/W & Stone Curb details	DHS	SB
3	Dec. 2012	Changed to tie bar from dowel	DHS	SB
2	Dec. 2009	Dowel size & # pvmt range and curb det.	DHS	SB
1	Feb. 2008	Repl. Both Pvmt. w/ Curb Det.'s	DHS	SB

DRAWN BY: rm/mc
APP'D BY: [signature]

SHAWNEE COUNTY, KANSAS
PUBLIC WORKS DEPARTMENT
1515 NW SALINE
TOPEKA, KS 66618
(785) 233-7702

TOPEKA Public Works
ENGINEERING
620 SE MADISON St. • 2nd Floor • TOPEKA, KS 66607
Phone: (785) 368-3842 • Fax: (785) 368-3851

STANDARD DETAILS

MISCELLANEOUS DETAILS I
(DT-017)

DATE: Month Year
SHEET: X of X
PROJ.: X-XXXXXX.XX